5 11 502 0110 0

ecorino play unit Dom, solo

made in germany

Scope of delivery

8x post construction: SW or steel
8x post shoe: steel galvanised
2x platform construction: SW
2x wall panel wood: SW
2x wall panel: HPL
7x decoration crossbar: SW
2x cord protection: HPL
1x long pent roof wood: SW
1x ramp: SW
1x slide entry plate: HPL
1x play panel gear wheel: HPL
1x staircase: SW
1x access restriction: HPL
Fittings: stainless steel

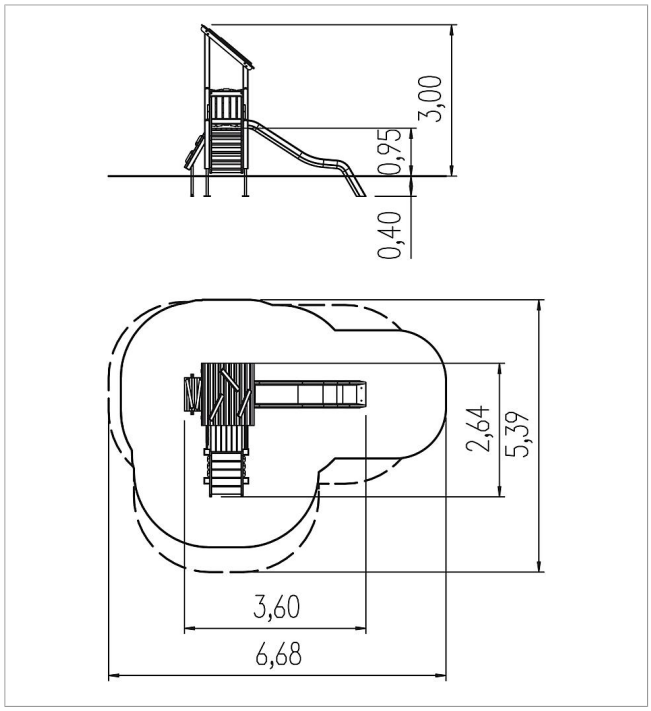

Material	SW pi
Foundation level	FL 1
Minimum space	668x539x300 cm
Free falling height	95 cm
Impact protection net	23,0 m²
Foundations	9x CF or 7x PFs
Assembly	2 persons/8 h